MACHINING DEVIATIONS FOR LINEAR DIMENSIONS CLASS - MEDIUM	RANGE	0.5 - 3	3 - 6	6 - 30	30 - 120	120 - 400	400 - 1000	1000 - 2000	2000 - 4000
	TOLERANCE	±0.1	±0.1	±0.2	±0.3	±0.5	±0.8	±1.2	±2

GENERAL TOLERANCES FOR LINEAR & ANGULAR DIMENSION SHALL BE AS PER ISO 2768-1 | GENERAL GEOMETRICAL TOLERANCES SHALL BE AS PER ISO 2768-2

GENERAL TOLERANCES FOR WELDED STRUCTURE SHALL BE AS PER ISO 13920 | VALUES OF SURFACE TEXTURE SHALL BE AS PER ISO 1302.

WELDING SHALL BE CARRIED OUT AS PER EN 15085-3 | WELDING PROCESS SHALL BE AS PER EN ISO-4063

WELDING SYMBOLS SHALL BE AS PER EN ISO-2553 | WELDING POSITIONS SHALL BE AS PER EN ISO 6947

STATUS: MOCKUP/PROTO/PRODUCTION

QUALITY LEVELS FOR IMPERFECTIONS IN FUSION WELDED JOINTS SHALL BE AS PER EN ISO 5817

WELD JOINT PREPARATIONS SHALL BE AS PER EN ISO 9692 & EN 15085-3 | INSPECTION & TESTING OF WELDED JOINTS SHALL BE AS PER EN 15085-5

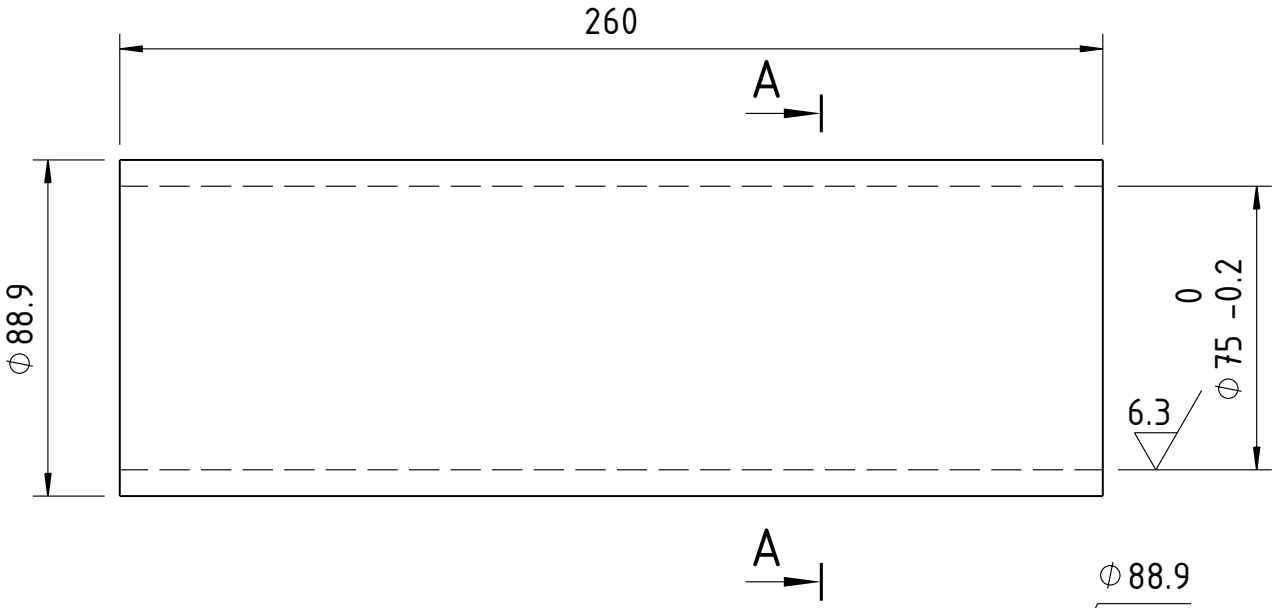

UN CONTROLLED

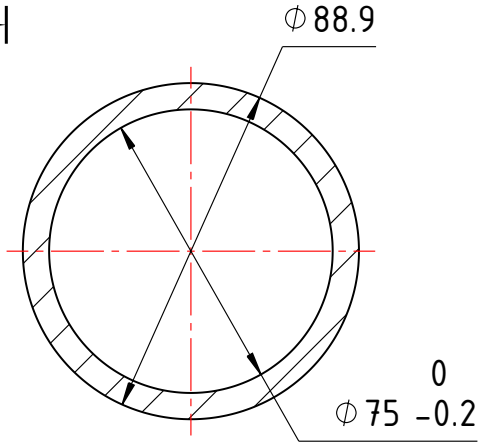

SECTION A-A

NOTES:

1. ALL EDGE PREPARATIONS SHALL BE DONE BY MACHINING ONLY TO GRADE NO. N10.
2. REMOVE ALL SHARP EDGES & BURRS.
3. INNER DIA TO BE MACHINED TO ø75 (0/-0.2) AS SINGLE PART MACHINING.

SL.No.	QTY	PART / STOCK No.	DESCRIPTION	SIZE (mm)	COMPANY STD./I.S MATERIAL	Wt. (Kg)
			SEAMLESS PIPE	ø88.9x8W/T; L=260		

PRODUCT	TRAIN B28				
REF DRG					
MATERIAL	EN 10297-1 Gr. E355+N				
HEAT TREAT.		APPD	BN	01.12.2025	
SURFACE TREAT.		REVD	YB	01.12.2025	
TITLE	LIFTING PIPE	CHKD	YB	01.12.2025	
		DRWN	SSM	01.12.2025	
		SCALE 1:2	SHEET 1 OF 1	Wt.(kg) 3.65kg	
		DRG No. 843-41424			ALT 0

ALT.No.	ECN No./CHANGES	DATE	BY	CHKD	APPD

बी ई एम एल BEML Beyond Possibilities BANGALORE COMPLEX

A4

GRADE No.	N12	N11	N10	N9	N8	N7	N6	N5	N4	N3	N2	N1
VALUE	50	25	12.5	6.3	3.2	1.6	0.8	0.4	0.2	0.1	0.05	0.025
SYMBOL												

SURFACE ROUGHNESS

COPY RIGHT & CONFIDENTIAL:
THIS DOCUMENT IS THE EXCLUSIVE PROPERTY OF BEML Limited & CONTAINS CONFIDENTIAL INFORMATION.
THIS DOCUMENT OR ITS CONTENTS SHALL NOT BE USED, REPRODUCED OR DISCLOSED IN WHOLE OR IN PART, WITHOUT PRIOR WRITTEN PERMISSION OF BEML Limited
THIS DOCUMENT & ALL ITS COPIES SHALL BE RETURNED TO BEML Limited ON DEMAND.